Revision Notes.				
-				
APA: -	Drawn:-	Checked:-	Approved:-	Date: -

VIEW A

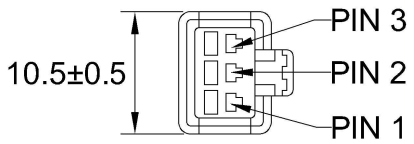

MALE MATING FACE

PIN#	COLOUR	DESCRIPTION
1	BLACK	GND
2	YELLOW	RS232-RX
3	WHITE	RS232-TX

VIEW B

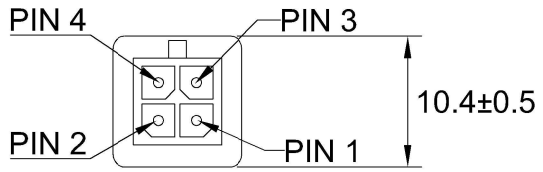

PIN#	COLOUR	DESCRIPTION
1	RED	+5V
2	WHITE	RS485-B
3	GREEN	RS485-A
4	BLACK	GND

SECTION A-A

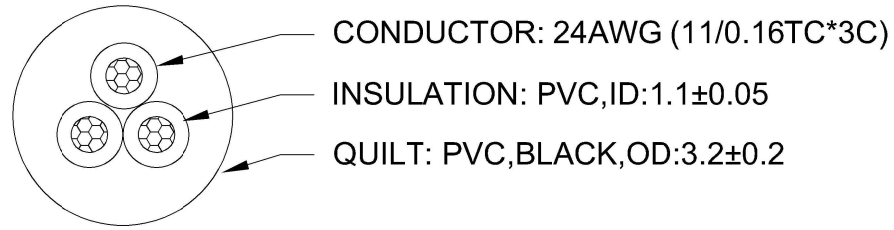

SECTION B-B

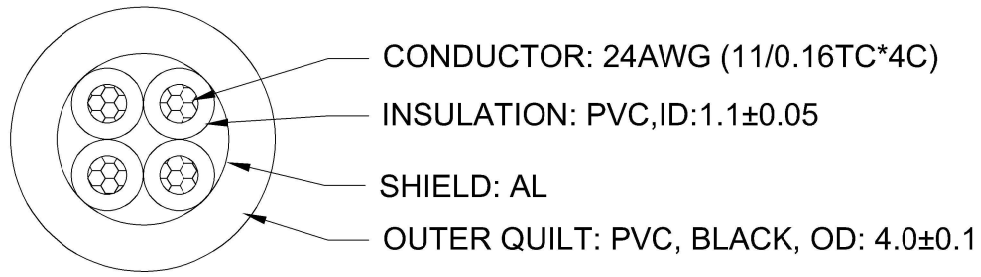

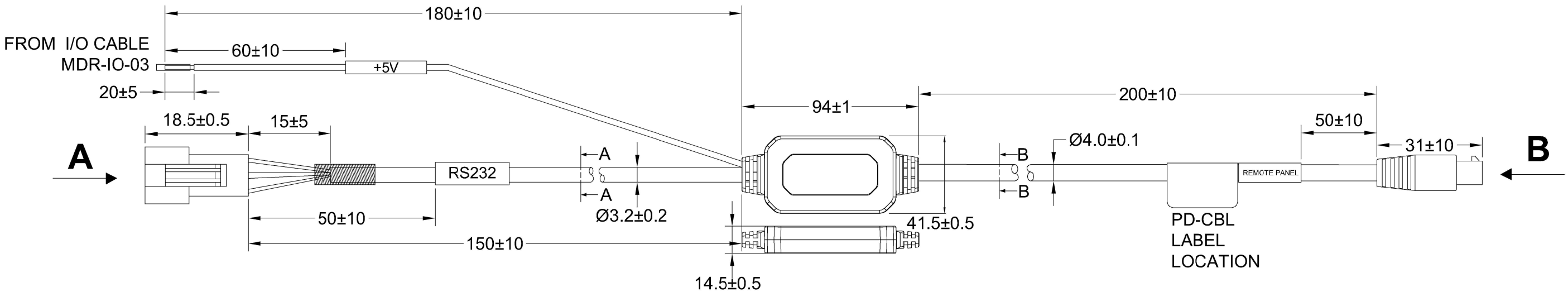

LABEL SPECIFICATIONS
1. ALL LABELS SHOULD BE SILVER.
2. ALL INK SHOULD BE PERMANENT.
3. ALL TEXT PRINTED SHOULD BE 3MM.

NOTES:
1. REFERENCE INSTRUCTION GUIDE FOR FUNCTIONALITY.
2. FOR PD-CBL LABEL REFER TO LATEST REVISION OF DRAWING BE-004150-XX-19.
3. ANY CUSTOMER MODIFICATION OF THIS PRODUCT CAUSING SUBSEQUENT FAILURE IS NOT A LIABILITY OF BRIGADE ELECTRONICS GROUP PLC.

PROPRIETARY NOTICE
THIS DESIGN AND TECHNICAL INFORMATION APPEARING ON THIS DRAWING IS THE PROPERTY OF BRIGADE ELECTRONICS, AND IS DISCLOSED IN CONFIDENCE. IT IS NOT TO BE COPIED, REPRODUCED, REVEALED TO OR EXPROPRIATED BY OTHERS, EITHER IN WHOLE OR IN PART WITHOUT THE EXPRESS WRITTEN CONSENT OF BRIGADE ELECTRONICS.

BRIGADE®
www.brigade-electronics.com

Assembly Pl Approval	Approved by	Checked by	Drawn by
P.BU	S.LAVER	S.ZHANG	F.ADEMUJIMI

Angle of Projection	Units	Scale	Released	Assembly Ref
Third Angle	mm	N/A	10/03/22	N/A

Status RELEASED	MDR-AC-ACC-01
Part No 7051	BE-004648-00-21

FrameV3